MAKING MODERN LIVING POSSIBLE

Technical brochure

Thermostatic expansion valves type TE5 to TE55

The TE series expansion valve regulate the injection of refrigerant into evaporators. It controls the refrigerant flow based on the superheat. The exchangeable power element is produced with the well known Danfoss laser welding technology for extended lifetime capability. The TE series is available with a wide range of orifices which will cover a wide range of applications.

Features

- Large operating range:
  N-range -40°C to +10°C /
  B-range -60°C to -25°C
- Interchangeable orifice assembly.
- Stainless steel power element, capillary tube and bulb.
- Wide capacity range.
- MOP function is available.
- Superior charge performance.
- Patented bulb strap design.
- MWP (maximum working pressure) 28 bar.
- Wide capacity range to minimize capacity gap and overlap.
- TE55 has balanced orifice design.

Technical data

Max. temperature
Bulb, when valve is assembled: 100°C
Complete valve when not assembled: 70°C

Min. temperature: –60°C
Max. test pressure: 32 bar

Maximum working pressure: 28 bar

MOP-points

Refrigerant	Range N – 40 → +10°C	Range NM – 40 → – 5°C	Range NL – 40 → – 15°C	Range B – 60 → – 25°C
	MOP-point in evaporating temperature t_e and evaporating pressure p_e			
	+15°C/+60°F	0°C/+32°F	– 10°C/+15°F	– 20°C/– 4°F
R22	6.9 bar / 100 psig	4.0 bar / 55 psig	2.6 bar / 35 psig	1.5 bar / 20 psig
R134a	3.9 bar / 55 psig	2.5 bar / 35 psig	21.0 bar / 15 psig	0.3 bar / 5 psig
R404A/R507	8.6 bar / 125 psig	5.1 bar / 75 psig	3.4 bar / 50 psig	2.0 bar / 30 psig
R407C	6.6 bar / 95 psig	3.6 bar / 50 psig	2.2 bar / 30 psig	1.1 bar / 15 psig

MOP = Max. Operating Pressure

Superheat

SS = static superheat
OS = opening superheat
SH = SS + OS = total superheat
Q_{nom} = rated capacity
Q_{max} = maximum capacity

Static superheat SS can be adjusted with setting spindle.
The standard factory superheat setting SS is 4 K.
The opening superheat OS is 4 K from when opening begins to where the valve reaches its rated capacity Q_{nom}.

Example
Static superheat SS = 4 K
Opening superheat OS = 4 K
Total superheat SH = 4 + 4 = 8 K

Using orifice with range B element, please check superheat under running conditions and re-adjust superheat setting, if necessary.

Identification

The thermostatic element is fitted with a label (on top of the diaphragm). The code refers to the refrigerant for which the valve is designed:

X = R22
N = R134a
S = R404A/R507
Z = R407C

The label holds information like valve type, evaporating temperature range, MOP point, refrigerant, and max. test pressure, PS.

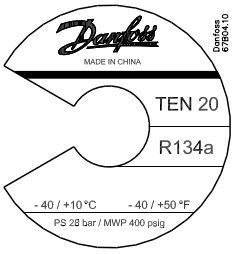

Element label

Orifice assembly for TE5, TE12, 20 and 55
The orifice assembly is marked on top of the spring cup, e.g. as shown in the figure.
For a given size of valve, the same orifice assembly can be used for valves with ranges N and B.

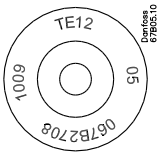

Orifice assembly marking for TE5 to TE55

TE12 = For valve type

05 = Orifice no.

067B2708 = Orifice code no. for sales order

1009 = Production date (Week, Year)

Capillary tube tag for TE5 to TE55
The label gives the orifice size (04). A new label always accompanies a new orifice assembly.

Capillary tube tag TE5 to TE55

Design/Function

General
All TE valves have an interchangeable orifice assembly.

TE5 to TE55 valves are built up of three main components:
1 - Thermostatic element
2 - Orifice assembly
3 - Valve body with connections

The orifice is refrigerant and range independend.

All valves are equipped with external pressure equalization.

To ensure long operating life, the valve cone and seat are made of a special alloy with particularly good wear properties.

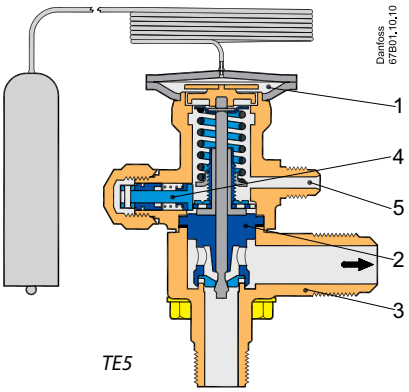

TE5

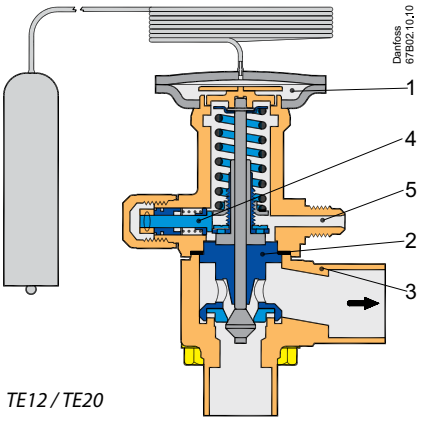

TE12 / TE20

1. Thermostatic element (diaphragm)
2. Interchangeable orifice assembly
3. Valve body
4. Superheat setting spindle (see instructions)
5. Ext. pressure equalizing connection with 1/4 in./6 mm flare nut

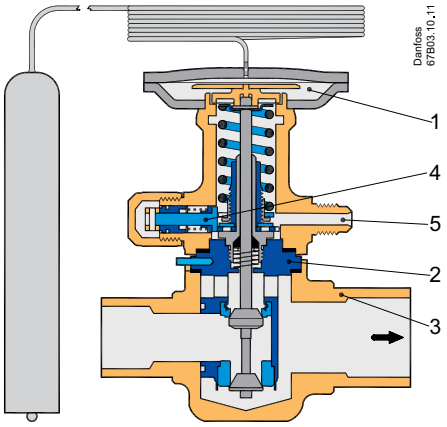

TE55

Ordering

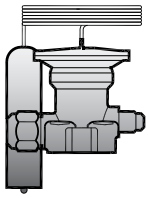

Thermostatic element - including bulb strap

R134a

Valve type	Pressure equalization	Capillary tube	Code no.		
			Range N –40 to +10°C		Range NM –40 to –5°C
	1/4 in. / 6 mm	m	Without MOP	MOP +15°C	MOP 0°C
TE5	Ext.[1])	3	067B3297	067B3298	067B3360
TE12	Ext.	3	067B3232	067B3233	
TE12	Ext.	5	067B3363		
TE20	Ext.	3	067B3292	067B3293	
TE20	Ext.	5	067B3370		
TE55	Ext.	3	067G3222	067G3223	
TE55	Ext.	5	067G3230		

[1]) Pressure equalization, please contact Danfoss.

Thermostatic element - including bulb strap

R404A/R507

Valve type	Pressure equalization	Capillary tube	Code no.					
			Range –40 to +10°C		Range NM –40 to –5°C	Range NL –40 to –15°C	Range B –60 to –25°C	
	1/4 in. / 6 mm	m	Without MOP	MOP +15°C	MOP 0°C	MOP –10°C	Without MOP	MOP –20°C
TE5	Ext.[1])	3	067B3342		067B3357	067B3358	067B3344	067B3343
TE12	Ext.	3	067B3347		067B3345	067B3348		067B3349
TE12	Ext.	5	067B3346					067B3350
TE20	Ext.	3	067B3352		067B3351	067B3353		067B3354
TE20	Ext.	5	067B3356					067B3355
TE55	Ext.	3	067G3302		067G3303	067G3304		067G3305
TE55	Ext.	5	067G3301					067G3306

[1]) Pressure equalization, please contact Danfoss.

Thermostatic element - including bulb strap

R407C

Valve type	Pressure equalization	Capillary tube	Code no.	
			Range N –40 to +10°C	
	1/4 in. / 6 mm	m	Without MOP	MOP+15°C
TE5	Ext. [1])	3	067B3278	067B3277
TE12	Ext.	3	067B3366	067B3367
TE20	Ext.	5	067B3371	067B3372
TE55	Ext.	5	067G3240	067G3241

Thermostatic element - including bulb strap

R22/R407C

Valve type	Pressure equalization	Capillary tube	Code no.					
			Range N –40°C to +10°C		Range NM –40 to –5°C	Range NL –40 to –15°C	Range B –60 to –25°C	
	1/4 in. / 6 mm	m	Without MOP	MOP+15°C	MOP 0°C	MOP –10°C	Without MOP	MOP –20°C
TE5	Ext.[1])	3	067B3250	067B3267	067B3249	067B3253	067B3263	067B3251
TE12	Ext.	3	067B3210	067B3227	067B3207	067B3213		067B3211
TE12	Ext.	5	067B3209					067B3212
TE20	Ext.	3	067B3274	067B3286	067B3273	067B3275		067B3276
TE20	Ext.	5	067B3290					067B3287
TE55	Ext.	3	067G3205	067G3220	067G3206			067G3207
TE55	Ext.	5	067G3209					067G3217

Bulb strap for TE5 to TE55 delivered with the element

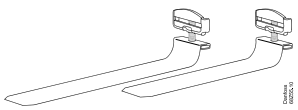

Type	Length	Max. tube diameter	Code no.
TE5 / TE12	225 mm	2 1/8 in / 53 mm	067N0558
TE20/TE55	350 mm	3 1/8 in / 78 mm	067N0559

Ordering
(continued)

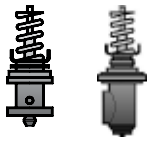

Orifice assembly

Valve type	Nominal capacity Range N: –40°C to 10°C								Orifice no.	Code no.
	R134a		R404A/507		R407C		R22			
	kW	TR	kW	TR	kW	TR	kW	TR		
TE5	6,68	1,91	8,17	2,33	10,70	3,06	10,40	2,97	0.5	**067B2788**
TE5	12,20	3,49	14,90	4,26	19,60	5,60	19,10	5,46	1	**067B2789**
TE5	17,00	4,86	20,50	5,86	27,20	7,77	26,30	7,51	2	**067B2790**
TE5	21,80	6,23	26,30	7,51	34,80	9,94	33,80	9,66	3	**067B2791**
TE5	29,70	8,49	35,70	10,20	47,40	13,50	46,00	13,10	4	**067B2792**
TE12	37,70	10,80	50,70	14,50	55,80	15,90	57,20	16,30	5	**067B2708**
TE12	50,10	14,30	64,00	18,30	73,90	21,10	76,30	21,80	6	**067B2709**
TE12	65,70	18,80	81,30	23,20	94,30	26,90	97,80	27,90	7	**067B2710**
TE20	77,80	22,20	87,10	24,90	118,00	33,70	128,00	36,60	8	**067B2771**
TE20	92,30	26,40	102,00	29,10	136,00	38,90	150,00	42,90	9	**067B2773**
TE55	For specifications, please contact Danfoss								9B	**067G2705**
TE55	111,00	31,70	128,00	36,60	161,00	46,00	169,00	48,30	10	**067G2701**
TE55	122,00	34,90	138,00	39,40	175,00	50,00	184,00	52,60	11	**067G2704**
TE55	134,00	38,30	152,00	43,40	191,00	54,60	202,00	57,70	12	**067G2707**
TE55	166,00	47,40	182,00	52,00	232,00	66,30	245,00	70,00	13	**067G2710**

The nominal capacity is based on:
Evaporating temperature t_e = +4.4°C
Condensing temperature t_c = +38°C
Refrigerant temperature ahead of valve t_l = +37°C

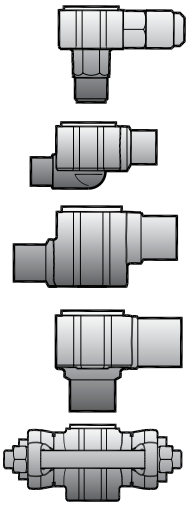

Valve body

Type	Connection Inlet × Outlet		Code no.			
	in.	mm	Flare angleway	Solder angleway	Solder straightway	Solder flanges
TE5	$^1/_2 \times {}^5/_8$		**067B4013**	**067B4009** [1)]	**067B4007** [1)]	
	$^1/_2 \times {}^7/_8$			**067B4010** [1)]	**067B4008** [1)]	
	$^5/_8 \times {}^7/_8$			**067B4011** [1)]	**067B4032** [1)]	
	$^7/_8 \times 1^1/_8$			**067B4034** [2)]	**067B4033** [2)]	
TE5		12 × 16	**067B4013**	**067B4004** [1)]	**067B4002** [1)]	
		12 × 22		**067B4005** [1)]	**067B4003** [1)]	
		16 × 22		**067B4012** [1)]	**067B4035** [1)]	
		22 × 28		**067B4037** [2)]	**067B4036** [2)]	
TE12	$^5/_8 \times {}^7/_8$					**067B4025** [1)]
	$^7/_8 \times 1$					**067B4026** [1)]
	$^7/_8 \times 1^1/_8$			**067B4023** [2)]	**067B4021** [2)]	
TE12		16 × 22				**067B4027** [1)]
		22 × 25				**067B4015** [1)]
		22 × 28		**067B4017** [2)]	**067B4016** [2)]	
TE20	$^7/_8 \times 1^1/_8$			**067B4023** [2)]	**067B4021** [2)]	
		22 × 28		**067B4017** [2)]	**067B4016** [2)]	
TE55	$1^1/_8 \times 1^3/_8$			**067G4004** [3)]	**067G4003** [3)]	
		28 × 35		**067G4002** [3)]	**067G4001** [3)]	

[1)] ODF × ODF
[2)] ODF × ODM
[3)] ODM × ODM
ODF = Internal diameter
ODM = External diameter

How to select a valve:

Example:

Q (capacity) = 45kW
Tcon (condensing temperature) = 25°C
Tevap (evaporator temperature) = -30°C
Tsub (subcooling temperature) =10K
Dpd (distributer pressure drop) = 2 bar

Q (capacity) = 45kW
fsub (subcooling correction factor) = 1.09
fp (distribution correction factor) = 0.85

$$\frac{Q}{fsub \times fp} = \text{Selected capacity}$$

$$\frac{45}{1.09 \times 0.85} = 48.6 \text{ kW}$$

The selection will be:
TE55 orifice 10 (52.70 kW > 48.6 kW)

Subcooling correction factor 'fsub'

Subcooling [K]	2	4	10	15
Correction factor	0.97	1.00	1.09	1.16

Distributer correction factor 'fp'

Evaporating temperature [°C]	Δp	-40	-35	-30
"Pressure drop [bar]"	0.00	1.00	1.00	1.00
	1.00	0.93	0.93	0.93
	2.00	0.86	0.86	0.85

Capacity in kW, range N, -40°C to +10°C, opening superheat sh= 4 K

Cond. temp.	Evaporating [°C]				Valve	Orifice
	-40	-35	-30	-25		
25 °C	34.80	39.80	45.40	51.50	TE20	9
	40.00	46.10	52.70	60.00	TE55	10
	44.60	51.30	58.70	66.70	TE55	11

Capacity in kW. range N. -40°C to +10°C. opening superheat sh= 4 K

R134a

Condensing temperature	Evaporating [°C]											Valve type	Orifice
	-40	-35	-30	-25	-20	-15	-10	-5	0	5	10		
25°C	2.59	2.94	3.33	3.73	4.16	4.58	5.00	5.37	5.65	5.79	5.72	TE5	0.5
	4.76	5.42	6.12	6.87	7.65	8.43	9.18	9.84	10.34	10.59	10.44	TE5	1
	6.69	7.61	8.60	9.64	10.72	11.79	12.81	13.70	14.36	14.64	14.37	TE5	2
	8.55	9.73	11.01	12.36	13.76	15.18	16.53	17.72	18.60	19.00	18.69	TE5	3
	11.53	13.16	14.92	16.79	18.73	20.68	22.54	24.16	25.36	25.86	25.36	TE5	4
	15.16	17.14	19.30	21.63	24.08	26.59	29.04	31.20	33.00	33.90	33.60	TE12	5
	19.65	22.28	25.17	28.29	31.60	35.00	38.40	41.40	43.90	45.20	44.80	TE12	6
	26.32	29.88	33.80	38.10	42.60	47.30	51.90	56.10	59.50	61.30	60.80	TE12	7
	30.20	34.50	39.10	44.00	49.30	54.60	59.80	64.40	67.80	69.40	68.30	TE20	8
	34.80	39.80	45.40	51.50	58.00	64.80	72.00	78.00	82.00	85.00	84.00	TE20	9
	40.00	46.10	52.70	60.00	67.70	76.00	84.00	92.00	98.00	102.00	102.00	TE55	10
	44.60	51.30	58.70	66.70	75.00	84.00	93.00	102.00	109.00	113.00	113.00	TE55	11
	48.50	55.90	64.00	73.00	83.00	93.00	103.00	113.00	121.00	126.00	127.00	TE55	12
	60.60	70.00	80.00	92.00	104.00	117.00	130.00	142.00	152.00	157.00	156.00	TE55	13

Capacity in kW. range N. -40°C to +10°C. opening superheat sh= 4 K

R134a

Condensing temperature	Evaporating [°C]											Valve type	Orifice
	-40	-35	-30	-25	-20	-15	-10	-5	0	5	10		
35°C	2.65	3.02	3.42	3.87	4.34	4.85	5.36	5.87	6.35	6.76	7.03	TE5	0.5
	4.86	5.54	6.29	7.11	7.98	8.90	9.85	10.78	11.64	12.36	12.84	TE5	1
	6.81	7.78	8.83	9.98	11.19	12.47	13.77	15.03	16.19	17.13	17.72	TE5	2
	8.70	9.92	11.26	12.72	14.29	15.94	17.64	19.31	20.84	22.10	22.91	TE5	3
	11.63	13.31	15.16	17.17	19.34	21.63	23.98	26.28	28.39	30.10	31.10	TE5	4
	15.31	17.28	19.47	21.88	24.52	27.34	30.30	33.30	36.10	38.50	40.20	TE12	5
	19.62	22.23	25.14	28.38	31.90	35.80	39.80	43.90	47.80	51.20	53.60	TE12	6
	26.12	29.49	33.30	37.50	42.10	47.10	52.50	57.90	63.20	67.80	71.00	TE12	7
	30.30	34.50	39.20	44.30	50.00	56.00	62.30	68.60	74.00	79.00	82.00	TE20	8
	34.10	39.00	44.40	50.50	57.30	64.70	73.00	81.00	88.00	95.00	99.00	TE20	9
	38.20	44.20	51.00	58.50	66.80	76.00	85.00	95.00	105.00	114.00	121.00	TE55	10
	42.20	48.90	56.40	64.70	74.00	84.00	94.00	105.00	116.00	126.00	133.00	TE55	11
	45.60	52.90	61.00	70.00	80.00	91.00	103.00	116.00	128.00	139.00	148.00	TE55	12
	56.00	65.10	75.00	87.00	99.00	113.00	128.00	144.00	159.00	172.00	182.00	TE55	13

Capacity in kW. range N. -40°C to +10°C. opening superheat sh= 4 K **R134a**

Condensing temperature	Evaporating [°C]											Valve type	Orifice
	-40	-35	-30	-25	-20	-15	-10	-5	0	5	10		
45°C	2.64	3.01	3.42	3.87	4.37	4.92	5.49	6.10	6.70	7.28	7.80	TE5	0.5
	4.83	5.52	6.28	7.12	8.04	9.04	10.10	11.20	12.30	13.36	14.28	TE5	1
	6.75	7.72	8.80	9.99	11.28	12.67	14.14	15.66	17.17	18.58	19.78	TE5	2
	8.62	9.83	11.17	12.66	14.29	16.06	17.94	19.91	21.88	23.75	25.36	TE5	3
	11.41	13.07	14.92	16.97	19.23	21.69	24.32	27.06	29.79	32.40	34.50	TE5	4
	15.04	16.90	18.99	21.33	23.95	26.83	29.96	33.30	36.70	40.10	43.20	TE12	5
	19.04	21.51	24.29	27.43	30.90	34.90	39.10	43.70	48.50	53.20	57.50	TE12	6
	25.22	28.24	31.70	35.50	39.90	44.80	50.10	56.00	62.10	68.20	74.00	TE12	7
	29.52	33.50	38.00	43.10	48.70	54.90	61.60	68.80	76.00	83.00	89.00	TE20	8
	32.60	37.10	42.10	47.90	54.40	61.70	69.70	79.00	88.00	97.00	105.00	TE20	9
	35.10	40.90	47.40	54.80	63.10	72.00	83.00	94.00	105.00	117.00	127.00	TE55	10
	38.60	45.00	52.20	60.30	69.40	79.00	91.00	103.00	115.00	128.00	139.00	TE55	11
	41.40	48.20	56.00	64.70	75.00	86.00	98.00	111.00	126.00	140.00	153.00	TE55	12
	49.80	58.20	67.80	79.00	91.00	105.00	120.00	137.00	154.00	171.00	188.00	TE55	13

Capacity in kW. range N. -40°C to +10°C. opening superheat sh= 4 K **R134a**

Condensing temperature	Evaporating [°C]											Valve type	Orifice
	-40	-35	-30	-25	-20	-15	-10	-5	0	5	10		
55°C	2.56	2.92	3.32	3.77	4.27	4.81	5.41	6.05	6.72	7.40	8.06	TE5	0.5
	4.68	5.35	6.09	6.92	7.84	8.85	9.95	11.13	12.36	13.60	14.80	TE5	1
	6.52	7.48	8.54	9.71	11.01	12.43	13.97	15.61	17.31	19.01	20.62	TE5	2
	8.34	9.49	10.78	12.22	13.82	15.59	17.52	19.60	21.78	24.00	26.12	TE5	3
	10.91	12.49	14.27	16.26	18.49	20.96	23.66	26.58	29.64	32.70	35.70	TE5	4
	14.44	16.12	18.02	20.17	22.60	25.32	28.34	31.70	35.20	39.00	42.70	TE12	5
	18.03	20.27	22.81	25.69	28.96	32.70	36.80	41.40	46.40	51.60	56.90	TE12	6
	23.84	26.43	29.38	32.70	36.50	40.90	45.80	51.20	57.30	63.70	70.00	TE12	7
	28.12	31.80	35.90	40.60	45.90	51.80	58.40	65.70	73.00	81.00	89.00	TE20	8
	30.50	34.40	38.90	44.10	49.90	56.60	64.20	73.00	82.00	92.00	102.00	TE20	9
	31.20	36.50	42.60	49.50	57.30	66.20	76.00	87.00	99.00	112.00	125.00	TE55	10
	34.00	39.90	46.50	54.00	62.60	72.00	83.00	95.00	108.00	122.00	136.00	TE55	11
	36.10	42.30	49.40	57.50	66.70	77.00	89.00	102.00	117.00	132.00	148.00	TE55	12
	42.70	50.20	58.70	68.60	80.00	93.00	107.00	123.00	141.00	160.00	179.00	TE55	13

Subcooling correction factor 'fsub' 'fsub' = saturated condensing temp. - liquid temp. at valve inlet

Subcooling [K]	2	4	10	15	20	25	30	35	40	45	50
Correction factor	0.97	1.00	1.09	1.16	1.23	1.30	1.37	1.44	1.51	1.58	1.65

Distributer correction factor 'fp' * 'fp' * = pressure drop from evaporator inlet to outlet

Evaporating temperature [°C]	Δp	-40	-35	-30	-25	-20	-15	-10	-5	0	5	10
Pressure drop [bar]	0.0	1.00	1.00	1.00	1.00	1.00	1.00	1.00	1.00	1.00	1.00	1.00
	1.0	0.93	0.93	0.93	0.93	0.92	0.92	0.92	0.91	0.90	0.89	0.87
	1.5	0.90	0.89	0.89	0.89	0.88	0.88	0.87	0.86	0.84	0.82	0.79
	2.0	0.86	0.86	0.85	0.85	0.84	0.83	0.82	0.81	0.79	0.76	0.71

*calculated at 35°C condensing temperature

How to select a valve:

Example:

Q (capacity) = 45kW
Tcon (condensing temperature) = 25°C
Tevap (evaporator temperature) = -30°C
Tsub (subcooling temperature) =10K
Dpd (distributer pressure drop) = 2 bar

Q (capacity) = 45kW
fsub (subcooling correction factor) = 1.10
fp (distribution correction factor) = 0.92

$$\frac{Q}{fsub \times fp} = \text{Selected capacity}$$

$$\frac{45}{1.10 \times 0.92} = 44.5 \text{ kW}$$

The selection will be:
TE20 orifice 8 (48.4 kW > 44.5 kW)

Subcooling correction factor 'fsub'

Subcooling [K]	2	4	10	15
Correction factor	0.97	1.00	1.10	1.19

Distributer correction factor 'fp'

Evaporating temperature [°C]	Δp	-40	-35	-30
Pressure drop [bar]	0.0	1.00	1.00	1.00
	1.0	0.96	0.96	0.96
	1.5	0.94	0.94	0.94
	2.0	0.92	0.92	0.92

Capacity in kW, range N, -40°C to +10°C, opening superheat sh= 4 K

Cond. temp.	Evaporating [°C]				Valve	Orifice
	-40	-35	-30	-25		
25 °C	24.92	29.31	34.10	39.20	TE12	6
	32.50	37.90	43.90	50.60	TE12	7
	35.70	41.80	48.40	55.20	TE20	8

Capacity in kW. range N. -40°C to +10°C. opening superheat sh = 4 K

R404A/R507

Condensing temperature	Evaporating [°C]											Valve type	Orifice
	-40	-35	-30	-25	-20	-15	-10	-5	0	5	10		
25°C	3.68	4.21	4.77	5.34	5.91	6.45	6.93	7.31	7.54	7.55	7.30	TE5	0.5
	6.76	7.74	8.76	9.80	10.84	11.82	12.68	13.35	13.73	13.72	13.21	TE5	1
	9.49	10.86	12.28	13.71	15.12	16.43	17.55	18.39	18.81	18.68	17.88	TE5	2
	11.99	13.76	15.60	17.49	19.35	21.11	22.64	23.79	24.40	24.29	23.28	TE5	3
	16.09	18.54	21.09	23.70	26.28	28.70	30.80	32.30	33.10	32.80	31.20	TE5	4
	20.72	24.17	27.90	31.90	36.00	40.10	43.90	47.00	48.90	49.10	47.20	TE12	5
	24.92	29.31	34.10	39.20	44.50	49.90	54.90	59.10	61.70	62.10	59.60	TE12	6
	32.50	37.90	43.90	50.60	57.60	64.90	72.00	78.00	81.00	82.00	78.00	TE12	7
	35.70	41.80	48.40	55.20	62.20	69.10	75.00	80.00	83.00	83.00	80.00	TE20	8
	39.50	46.50	54.20	62.50	71.00	80.00	88.00	95.00	100.00	101.00	97.00	TE20	9
	46.50	55.30	64.90	75.00	86.00	97.00	108.00	117.00	124.00	127.00	125.00	TE55	10
	51.10	60.70	71.00	83.00	94.00	107.00	118.00	128.00	136.00	139.00	135.00	TE55	11
	54.80	65.30	77.00	89.00	103.00	116.00	130.00	142.00	151.00	155.00	152.00	TE55	12
	66.50	79.00	94.00	109.00	126.00	143.00	159.00	173.00	183.00	187.00	181.00	TE55	13

Capacity in kW. range N. -40°C to +10°C. opening superheat sh = 4 K

R404A/R507

Condensing temperature	Evaporating [°C]											Valve type	Orifice
	-40	-35	-30	-25	-20	-15	-10	-5	0	5	10		
35°C	3.45	3.98	4.55	5.15	5.78	6.42	7.05	7.63	8.12	8.46	8.61	TE5	0.5
	6.34	7.32	8.37	9.48	10.63	11.80	12.93	13.98	14.84	15.43	15.64	TE5	1
	8.90	10.28	11.75	13.29	14.88	16.47	17.99	19.35	20.44	21.12	21.27	TE5	2
	11.14	12.88	14.76	16.74	18.80	20.89	22.92	24.76	26.25	27.22	27.49	TE5	3
	14.85	17.27	19.87	22.63	25.50	28.40	31.20	33.70	35.70	36.90	37.10	TE5	4
	18.65	21.82	25.33	29.17	33.30	37.80	42.30	46.70	50.50	53.30	54.40	TE12	5
	22.27	26.29	30.70	35.70	41.00	46.80	52.70	58.50	63.60	67.30	68.70	TE12	6
	27.84	32.60	37.90	44.00	50.70	58.10	66.00	74.00	81.00	87.00	89.00	TE12	7
	32.40	38.00	44.30	51.10	58.30	66.00	74.00	81.00	87.00	91.00	93.00	TE20	8
	34.90	41.10	48.20	56.00	64.60	74.00	84.00	93.00	101.00	108.00	110.00	TE20	9
	40.60	48.70	57.70	67.70	79.00	90.00	103.00	115.00	126.00	136.00	141.00	TE55	10
	44.20	53.10	62.90	74.00	86.00	98.00	112.00	125.00	137.00	147.00	153.00	TE55	11
	47.10	56.60	67.20	79.00	92.00	106.00	121.00	136.00	150.00	162.00	170.00	TE55	12
	56.00	67.50	80.00	95.00	111.00	128.00	146.00	165.00	181.00	195.00	202.00	TE55	13

Capacity in kW. range N. -40°C to +10°C. opening superheat sh= 4 K

R404A/R507

Condensing temperature	Evaporating [°C]											Valve type	Orifice
	-40	-35	-30	-25	-20	-15	-10	-5	0	5	10		
45°C	3.08	3.57	4.11	4.70	5.32	5.99	6.67	7.36	8.02	8.60	9.05	TE5	0.5
	5.65	6.57	7.57	8.65	9.81	11.03	12.29	13.54	14.73	15.76	16.53	TE5	1
	7.94	9.25	10.66	12.18	13.79	15.47	17.19	18.88	20.43	21.74	22.65	TE5	2
	9.85	11.46	13.22	15.12	17.17	19.33	21.57	23.80	25.89	27.68	28.97	TE5	3
	13.04	15.28	17.72	20.38	23.25	26.28	29.41	32.50	35.40	37.70	39.30	TE5	4
	16.09	18.84	21.89	25.29	29.07	33.20	37.80	42.60	47.40	51.80	55.30	TE12	5
	19.05	22.51	26.38	30.70	35.60	41.00	46.90	53.20	59.60	65.50	70.00	TE12	6
	23.11	26.97	31.30	36.30	42.00	48.40	55.70	63.60	72.00	80.00	87.00	TE12	7
	28.01	32.90	38.40	44.50	51.30	58.70	66.60	75.00	83.00	90.00	95.00	TE20	8
	29.49	34.80	40.70	47.40	55.00	63.60	73.00	83.00	93.00	103.00	110.00	TE20	9
	33.40	40.50	48.50	57.40	67.40	79.00	91.00	104.00	117.00	129.00	140.00	TE55	10
	36.20	43.90	52.50	62.10	73.00	85.00	98.00	112.00	126.00	139.00	151.00	TE55	11
	38.20	46.40	55.50	65.90	78.00	91.00	105.00	120.00	136.00	151.00	165.00	TE55	12
	44.60	54.30	65.30	78.00	92.00	107.00	125.00	143.00	162.00	181.00	196.00	TE55	13

Capacity in kW. range N. -40°C to +10°C. opening superheat sh= 4 K

R404A/R507

Condensing temperature	Evaporating [°C]											Valve type	Orifice
	-40	-35	-30	-25	-20	-15	-10	-5	0	5	10		
55°C	2.60	3.03	3.50	4.01	4.57	5.18	5.83	6.51	7.20	7.88	8.50	TE5	0.5
	4.76	5.57	6.44	7.40	8.45	9.57	10.77	12.03	13.31	14.54	15.65	TE5	1
	6.69	7.85	9.10	10.46	11.94	13.52	15.19	16.91	18.64	20.27	21.68	TE5	2
	8.24	9.62	11.14	12.80	14.61	16.58	18.69	20.92	23.18	25.36	27.31	TE5	3
	10.79	12.72	14.85	17.19	19.75	22.55	25.55	28.69	31.90	34.90	37.50	TE5	4
	13.26	15.49	17.95	20.69	23.76	27.20	31.10	35.30	39.90	44.80	49.40	TE12	5
	15.48	18.28	21.41	24.92	28.88	33.40	38.40	44.10	50.30	56.80	63.10	TE12	6
	18.58	21.56	24.89	28.67	33.00	37.80	43.40	49.80	56.90	64.60	72.00	TE12	7
	23.07	27.07	31.50	36.50	42.10	48.40	55.40	63.00	71.00	79.00	87.00	TE20	8
	23.80	27.92	32.60	37.90	43.90	50.80	58.60	67.50	77.00	87.00	97.00	TE20	9
	25.71	31.50	38.10	45.50	53.80	63.20	74.00	85.00	98.00	111.00	123.00	TE55	10
	27.67	33.90	40.90	48.90	57.80	67.80	79.00	91.00	105.00	118.00	132.00	TE55	11
	28.94	35.50	42.90	51.30	60.80	72.00	84.00	97.00	112.00	127.00	142.00	TE55	12
	33.10	40.90	49.60	59.50	71.00	84.00	98.00	114.00	131.00	150.00	168.00	TE55	13

Subcooling correction factor 'fsub'

'fsub' = saturated condensing temp. - liquid temp. at valve inlet

Subcooling [K]	2	4	10	15	20	25	30	35	40	45	50
Correction factor	0.97	1.00	1.10	1.19	1.27	1.35	1.43	1.52	1.60	1.68	1.76

Distributer correction factor 'fp' *

'fp' * = pressure drop from evaporator inlet to outlet

Evaporating temperature [°C]	Δp	-40	-35	-30	-25	-20	-15	-10	-5	0	5	10
Pressure drop [bar]	0.0	1.00	1.00	1.00	1.00	1.00	1.00	1.00	1.00	1.00	1.00	1.00
	1.0	0.96	0.96	0.96	0.96	0.96	0.96	0.95	0.95	0.94	0.94	0.92
	1.5	0.94	0.94	0.94	0.94	0.94	0.93	0.93	0.92	0.91	0.90	0.88
	2.0	0.92	0.92	0.92	0.92	0.91	0.91	0.90	0.89	0.88	0.87	0.84

*calculated at 35°C condensing temperature

Capacity in kW. range B. -60°C to -25°C. opening superheat sh= 4 K

R404A/R507

Condensing temperature	Evaporating [°C]								Valve type	Orifice
	-60	-55	-50	-45	-40	-35	-30	-25		
20°C	2.01	2.41	2.87	3.37	3.92	4.51	5.12	5.73	TE5	0.5
	3.66	4.41	5.25	6.19	7.21	8.29	9.41	10.50	TE5	1
	5.09	6.14	7.33	8.66	10.10	11.60	13.20	14.70	TE5	2
	6.38	7.70	9.22	10.90	12.80	14.70	16.80	18.80	TE5	3
	8.32	10.10	12.20	14.50	17.10	19.90	22.80	25.60	TE5	4
	10.30	12.30	14.70	17.50	20.50	23.80	27.30	30.80	TE12	5
	12.80	15.50	18.60	22.20	26.20	30.70	35.50	40.50	TE12	6
	16.50	19.90	24.00	28.60	33.90	39.70	46.10	52.60	TE12	7
	For this range, please contact Danfoss								TE20	8
									TE20	9
	20,60	24,60	29,20	34,40	40,10	46,10	52,40	58,50	TE55	9B
	24.10	29.00	34.70	41.40	49.00	57.50	66.80	76.60	TE55	10
	26.60	32.00	38.40	45.70	54.10	63.50	73.80	84.60	TE55	11
	28.60	34.50	41.30	49.30	58.50	68.80	80.20	92.30	TE55	12
	34.70	42.00	50.50	60.50	71.90	84.90	99.20	114.00	TE55	13

Capacity in kW. range B. -60°C to -25°C. opening superheat sh= 4 K

R404A/R507

Condensing temperature	Evaporating [°C]								Valve type	Orifice
	-60	-55	-50	-45	-40	-35	-30	-25		
30°C	1.88	2.27	2.72	3.23	3.79	4.40	5.04	5.72	TE5	0.5
	3.42	4.14	4.97	5.92	6.96	8.09	9.29	10.50	TE5	1
	4.72	5.75	6.93	8.27	9.76	11.40	13.10	14.80	TE5	2
	5.87	7.15	8.63	10.30	12.20	14.30	16.50	18.70	TE5	3
	7.54	9.25	11.30	13.60	16.20	19.20	22.30	25.50	TE5	4
	9.33	11.30	13.60	16.30	19.30	22.70	26.30	30.20	TE12	5
	11.40	13.90	16.90	20.40	24.40	28.90	33.90	39.30	TE12	6
	14.40	17.60	21.30	25.70	30.80	36.60	43.00	49.90	TE12	7
	For this range, please contact Danfoss								TE20	8
									TE20	9
	18,50	22,30	26,60	31,70	37,30	43,40	50,00	56,60	TE55	9B
	21.10	25.60	31.00	37.20	44.30	52.50	61.70	71.70	TE55	10
	23.20	28.10	34.00	40.80	48.70	57.70	67.70	78.60	TE55	11
	24.80	30.10	36.30	43.60	52.10	61.90	72.80	84.80	TE55	12
	29.50	36.00	43.50	52.50	62.90	75.00	88.60	104.00	TE55	13

Subcooling correction factor 'fsub'

'fsub' = saturated condensing temp. - liquid temp. at valve inlet

Subcooling [K]	2	4	10	15	20	25	30	35	40	45	50
Correction factor	0.96	1.00	1.11	1.20	1.28	1.37	1.46	1.54	1.63	1.72	1.80

Distributer correction factor 'fp' *

fp' * = pressure drop from evaporator inlet to outlet

Evaporating temperature [°C]	Δp	-60	-55	-50	-45	-40	-35	-30	-25
Pressure drop [bar]	0.0	1.0	1.0	1.0	1.0	1.0	1.0	1.0	1.0
	1.0	0.97	0.96	0.96	0.96	0.96	0.96	0.96	0.96
	1.5	0.95	0.95	0.95	0.94	0.94	0.94	0.94	0.94
	2.0	0.93	0.93	0.93	0.93	0.92	0.92	0.92	0.92

*calculated at 35°C condensing temperature

Capacity in kW. range B. -60°C to -25°C. opening superheat sh= 4 K

R404A/R507

Condensing temperature	Evaporating [°C]								Valve type	Orifice
	-60	-55	-50	-45	-40	-35	-30	-25		
40°C	1.69	2.06	2.48	2.97	3.51	4.11	4.75	5.43	TE5	0.5
	3.06	3.74	4.53	5.43	6.44	7.55	8.76	10.00	TE5	1
	4.21	5.17	6.29	7.58	9.03	10.60	12.30	14.10	TE5	2
	5.17	6.35	7.75	9.36	11.20	13.20	15.40	17.70	TE5	3
	6.52	8.08	9.96	12.20	14.70	17.60	20.80	24.10	TE5	4
	8.10	9.91	12.00	14.50	17.40	20.60	24.20	28.00	TE12	5
	9.70	12.00	14.60	17.80	21.50	25.80	30.70	36.00	TE12	6
	12.00	14.80	18.10	22.00	26.60	31.90	37.90	44.60	TE12	7
	For this range, please contact Danfoss								TE20	8
									TE20	9
	15,80	19,10	23,10	27,70	33,00	38,80	45,10	51,80	TE55	9B
	17.60	21.60	26.20	31.70	38.20	45.60	54.00	63.30	TE55	10
	19.20	23.50	28.60	34.60	41.60	49.70	58.80	68.90	TE55	11
	20.40	24.90	30.30	36.70	44.20	52.80	62.70	73.60	TE55	12
	23.80	29.20	35.70	43.30	52.30	62.80	74.80	88.30	TE55	13

Capacity in kW. range B. -60°C to -25°C. opening superheat sh= 4 K

R404A/R507

Condensing temperature	Evaporating [°C]								Valve type	Orifice
	-60	-55	-50	-45	-40	-35	-30	-25		
50°C	1.47	1.80	2.18	2.63	3.13	3.69	4.29	4.95	TE5	0.5
	2.64	3.25	3.97	4.79	5.73	6.78	7.92	9.15	TE5	1
	3.61	4.47	5.50	6.68	8.04	9.55	11.20	13.00	TE5	2
	4.36	5.41	6.66	8.13	9.81	11.70	13.80	16.00	TE5	3
	5.35	6.72	8.39	10.40	12.70	15.40	18.40	21.70	TE5	4
	6.68	8.26	10.10	12.40	14.90	17.90	21.10	24.80	TE12	5
	7.75	9.68	12.00	14.80	18.10	21.90	26.30	31.20	TE12	6
	9.28	11.60	14.40	17.70	21.60	26.20	31.40	37.40	TE12	7
	For this range, please contact Danfoss								TE20	8
									TE20	9
	12,70	15,50	18,90	22,90	27,50	32,70	38,50	44,60	TE55	9B
	13.80	17.10	21.00	25.60	31.10	37.40	44.70	52.80	TE55	10
	14.90	18.50	22.70	27.70	33.60	40.50	48.30	57.00	TE55	11
	15.60	19.40	23.80	29.10	35.40	42.60	51.00	60.30	TE55	12
	17.80	22.20	27.40	33.60	41.00	49.60	59.50	70.80	TE55	13

Subcooling correction factor 'fsub'

'fsub' = saturated condensing temp. - liquid temp. at valve inlet

Subcooling [K]	2	4	10	15	20	25	30	35	40	45	50
Correction factor	0.96	1.00	1.11	1.20	1.28	1.37	1.46	1.54	1.63	1.72	1.80

Distributer correction factor 'fp' *

fp' * = pressure drop from evaporator inlet to outlet

Evaporating temperature [°C]	Δp	-60	-55	-50	-45	-40	-35	-30	-25
Pressure drop [bar]	0.0	1.0	1.0	1.0	1.0	1.0	1.0	1.0	1.0
	1.0	0.97	0.96	0.96	0.96	0.96	0.96	0.96	0.96
	1.5	0.95	0.95	0.95	0.94	0.94	0.94	0.94	0.94
	2.0	0.93	0.93	0.93	0.93	0.92	0.92	0.92	0.92

*calculated at 35°C condensing temperature

How to select a valve:

Example:

Q (capacity) = 45kW
Tcon (condensing temperature) = 25°C
Tevap (evaporator temperature) = -30°C
Tsub (subcooling temperature) =10K
Dpd (distributer pressure drop) = 2 bar

Q (capacity) = 45kW
fsub (subcooling correction factor) = 1.08
fp (distribution correction factor) = 0.92

$$\frac{Q}{fsub \times fp} = \text{Selected capacity}$$

$$\frac{45}{1.08 \times 0.92} = 45.3 \text{ kW}$$

The selection will be:
TE12 orifice 7 (46.5 kW > 45.3 kW)

Subcooling correction factor 'fsub'

Subcooling [K]	2	4	10	15
Correction factor	0.97	1.00	1.08	1.15

Distributer correction factor 'fp'

Evaporating temperature [°C]	Δp	-40	-35	-30
Pressure drop [bar]	0.0	1.00	1.00	1.00
	1.0	0.96	0.96	0.96
	1.5	0.94	0.94	0.94
	2.0	0.92	0.92	0.92

Capacity in kW, range N, -40°C to +10°C, opening superheat sh= 4 K

Cond. temp.	Evaporating [°C]				Valve	Orifice
	-40	-35	-30	-25		
25 °C	20.92	24.22	27.89	31.90	TE12	5
	26.60	30.90	35.80	41.10	TE12	6
	34.50	40.10	46.50	53.60	TE12	7

Capacity in kW. range N. -40°C to +10°C. opening superheat sh= 4 K

R407C

Condensing temperature	Evaporating [°C]											Valve type	Orifice
	-40	-35	-30	-25	-20	-15	-10	-5	0	5	10		
25°C	4.62	5.20	5.82	6.49	7.18	7.88	8.56	9.17	9.66	9.96	10.01	TE5	0.5
	8.48	9.55	10.70	11.92	13.19	14.46	15.69	16.78	17.65	18.17	18.21	TE5	1
	11.89	13.40	15.00	16.70	18.44	20.18	21.83	23.27	24.37	24.96	24.87	TE5	2
	15.02	16.95	19.04	21.25	23.56	25.87	28.09	30.00	31.60	32.40	32.40	TE5	3
	20.08	22.75	25.64	28.72	31.90	35.10	38.20	40.90	42.90	44.00	43.70	TE5	4
	20.92	24.22	27.89	31.90	36.20	40.70	45.10	49.20	52.70	55.10	55.90	TE12	5
	26.60	30.90	35.80	41.10	46.90	53.00	59.10	64.90	69.80	73.00	75.00	TE12	6
	34.50	40.10	46.50	53.60	61.40	69.70	78.00	86.00	93.00	98.00	100.00	TE12	7
	49.30	55.90	63.20	71.00	79.00	88.00	96.00	104.00	110.00	113.00	113.00	TE20	8
	54.30	62.00	71.00	80.00	90.00	101.00	112.00	123.00	131.00	137.00	137.00	TE20	9
	63.60	72.00	82.00	93.00	105.00	117.00	130.00	142.00	153.00	162.00	166.00	TE55	10
	70.00	80.00	91.00	102.00	115.00	129.00	143.00	156.00	168.00	177.00	181.00	TE55	11
	75.00	86.00	98.00	111.00	125.00	140.00	156.00	172.00	186.00	197.00	202.00	TE55	12
	92.00	105.00	120.00	136.00	154.00	173.00	192.00	211.00	228.00	241.00	246.00	TE55	13

Capacity in kW. range N. -40°C to +10°C. opening superheat sh= 4 K

R407C

Condensing temperature	Evaporating [°C]											Valve type	Orifice
	-40	-35	-30	-25	-20	-15	-10	-5	0	5	10		
35°C	4.54	5.13	5.77	6.47	7.22	8.01	8.82	9.62	10.36	10.99	11.45	TE5	0.5
	8.34	9.42	10.60	11.89	13.27	14.73	16.21	17.66	19.00	20.11	20.89	TE5	1
	11.69	13.22	14.89	16.70	18.62	20.62	22.65	24.60	26.36	27.78	28.69	TE5	2
	14.66	16.58	18.69	21.00	23.48	26.10	28.77	31.40	33.80	35.70	37.00	TE5	3
	19.43	22.09	25.03	28.25	31.70	35.40	39.10	42.70	46.00	48.60	50.20	TE5	4
	20.20	23.23	26.65	30.50	34.70	39.30	44.20	49.20	54.00	58.30	61.60	TE12	5
	25.38	29.35	33.90	38.90	44.60	50.90	57.60	64.50	71.00	77.00	82.00	TE12	6
	32.20	37.10	42.60	49.00	56.30	64.40	73.00	82.00	92.00	100.00	107.00	TE12	7
	47.00	53.30	60.30	68.10	77.00	86.00	96.00	105.00	114.00	122.00	127.00	TE20	8
	50.50	57.50	65.40	74.00	84.00	96.00	108.00	120.00	132.00	143.00	151.00	TE20	9
	58.30	66.80	76.00	87.00	99.00	112.00	126.00	141.00	155.00	169.00	180.00	TE55	10
	63.90	73.00	83.00	95.00	108.00	122.00	138.00	153.00	169.00	184.00	196.00	TE55	11
	68.20	78.00	89.00	102.00	116.00	132.00	149.00	167.00	185.00	202.00	216.00	TE55	12
	82.00	94.00	108.00	123.00	141.00	160.00	181.00	203.00	225.00	245.00	262.00	TE55	13

Capacity in kW. range N. -40°C to +10°C. opening superheat sh= 4 K

R407C

Condensing temperature	Evaporating [°C]											Valve type	Orifice
	-40	-35	-30	-25	-20	-15	-10	-5	0	5	10		
45°C	4.34	4.90	5.52	6.21	6.96	7.78	8.65	9.54	10.43	11.28	12.02	TE5	0.5
	7.96	8.99	10.15	11.43	12.82	14.33	15.93	17.58	19.21	20.74	22.06	TE5	1
	11.14	12.63	14.27	16.08	18.05	20.16	22.38	24.64	26.84	28.86	30.50	TE5	2
	13.88	15.70	17.72	19.96	22.44	25.12	27.97	30.90	33.90	36.60	38.90	TE5	3
	18.22	20.74	23.56	26.71	30.20	34.00	38.00	42.20	46.30	50.10	53.10	TE5	4
	19.01	21.63	24.62	28.03	31.90	36.20	40.90	46.00	51.30	56.50	61.40	TE12	5
	23.58	27.03	31.00	35.50	40.70	46.50	53.00	60.00	67.40	75.00	82.00	TE12	6
	29.67	33.60	38.20	43.50	49.60	56.60	64.50	73.00	83.00	92.00	102.00	TE12	7
	43.60	49.20	55.50	62.70	71.00	80.00	90.00	100.00	111.00	121.00	130.00	TE20	8
	45.80	51.80	58.70	66.50	76.00	86.00	97.00	110.00	123.00	137.00	149.00	TE20	9
	51.50	59.20	67.90	78.00	89.00	102.00	116.00	131.00	147.00	164.00	179.00	TE55	10
	56.00	64.40	74.00	85.00	97.00	111.00	126.00	142.00	160.00	177.00	194.00	TE55	11
	59.30	68.20	78.00	90.00	103.00	118.00	135.00	153.00	172.00	192.00	211.00	TE55	12
	69.80	80.00	93.00	107.00	123.00	141.00	161.00	183.00	207.00	231.00	253.00	TE55	13

Capacity in kW. range N. -40°C to +10°C. opening superheat sh= 4 K

R407C

Condensing temperature	Evaporating [°C]											Valve type	Orifice
	-40	-35	-30	-25	-20	-15	-10	-5	0	5	10		
55°C	4.04	4.55	5.12	5.75	6.46	7.24	8.08	8.98	9.91	10.84	11.73	TE5	0.5
	7.38	8.34	9.40	10.59	11.91	13.36	14.93	16.60	18.33	20.04	21.67	TE5	1
	10.32	11.70	13.23	14.94	16.82	18.88	21.09	23.43	25.81	28.14	30.30	TE5	2
	12.80	14.43	16.26	18.31	20.59	23.12	25.88	28.84	31.90	35.00	37.90	TE5	3
	16.60	18.87	21.43	24.32	27.57	31.20	35.10	39.40	43.80	48.20	52.20	TE5	4
	17.54	19.70	22.17	25.01	28.24	31.90	36.00	40.60	45.60	50.90	56.20	TE12	5
	21.44	24.30	27.59	31.40	35.70	40.70	46.40	52.70	59.70	67.20	75.00	TE12	6
	27.12	30.20	33.70	37.80	42.60	48.10	54.50	61.80	69.90	79.00	88.00	TE12	7
	39.40	44.10	49.60	55.80	62.80	71.00	80.00	90.00	100.00	112.00	122.00	TE20	8
	40.60	45.50	51.20	57.70	65.20	74.00	84.00	95.00	108.00	121.00	135.00	TE20	9
	43.50	50.20	57.90	66.70	77.00	88.00	101.00	116.00	132.00	148.00	165.00	TE55	10
	47.00	54.20	62.50	72.00	83.00	95.00	109.00	125.00	142.00	159.00	178.00	TE55	11
	49.30	56.90	65.70	76.00	87.00	101.00	116.00	132.00	151.00	170.00	191.00	TE55	12
	56.80	65.90	76.00	88.00	102.00	118.00	136.00	156.00	178.00	202.00	227.00	TE55	13

Subcooling correction factor 'fsub'

'fsub' = saturated condensing temp. - liquid temp. at valve inlet

Subcooling [K]	2	4	10	15	20	25	30	35	40	45	50
Correction factor	0.97	1.00	1.08	1.15	1.22	1.29	1.36	1.43	1.50	1.57	1.64

Distributer correction factor*

fp' * = pressure drop from evaporator inlet to outlet

Evaporating temperature [°C]	Δp	-40	-35	-30	-25	-20	-15	-10	-5	0	5	10
Pressure drop [bar]	0.0	1.00	1.00	1.00	1.00	1.00	1.00	1.00	1.00	1.00	1.00	1.00
	1.0	0.96	0.96	0.96	0.96	0.96	0.96	0.95	0.95	0.95	0.94	0.93
	1.5	0.94	0.94	0.94	0.94	0.94	0.93	0.93	0.93	0.92	0.91	0.90
	2.0	0.92	0.92	0.92	0.92	0.91	0.91	0.91	0.90	0.89	0.88	0.86

*calculated at 35°C condensing temperature

How to select a valve

Example:

Q (capacity) = 45kW
Tcon (condensing temperature) = 25°C
Tevap (evaporator temperature) = -30°C
Tsub (subcooling temperature) =10K
Dpd (distributer pressure drop) = 2 bar

Q (capacity) = 45kW
fsub (subcooling correction factor) = 1.07
fp (distribution correction factor) = 0.90

$$\frac{Q}{fsub \times fp} = \text{Selected capacity}$$

$$\frac{45}{1.07 \times 0.90} = 46.7 \text{ kW}$$

The selection will be:
TE12 orifice 7 (53.1 kW > 46.7 kW)

Subcooling correction factor 'fsub'

Subcooling [K]	2	4	10	15
Correction factor	0.98	1.00	1.07	1.13

Distributer correction factor 'fp'

Evaporating temperature [°C]	Δp	-40	-35	-30
Pressure drop [bar]	0.00	1.00	1.00	1.00
	1.00	0.96	0.95	0.95
	1.50	0.93	0.93	0.93
	2.00	0.91	0.91	0.90

Capacity in kW, range N, -40°C to +10°C, opening superheat sh= 4 K

Cond. temp.	Evaporating [°C]				Valve	Orifice
	-40	-35	-30	-25		
25 °C	31.40	35.80	40.50	45.60	TE12	6
	41.20	46.90	53.10	59.90	TE12	7
	54.50	62.50	71.00	80.00	TE20	8

Capacity in kW. range N. -40°C to +10°C. opening superheat sh= 4 K **R22**

Condensing temperature	Evaporating [°C]											Valve type	Orifice
	-40	-35	-30	-25	-20	-15	-10	-5	0	5	10		
25°C	4.53	5.12	5.73	6.37	7.00	7.62	8.17	8.61	8.87	8.89	8.56	TE5	0.5
	8.33	9.40	10.54	11.70	12.87	13.98	14.97	15.75	16.20	16.18	15.53	TE5	1
	11.68	13.20	14.78	16.40	17.99	19.50	20.81	21.79	22.30	22.16	21.15	TE5	2
	14.83	16.77	18.82	20.94	23.05	25.07	26.84	28.21	28.94	28.81	27.53	TE5	3
	19.91	22.61	25.47	28.42	31.40	34.10	36.60	38.40	39.30	38.90	37.00	TE5	4
	24.44	27.70	31.20	34.90	38.80	42.50	46.00	48.90	50.70	51.10	49.40	TE12	5
	31.40	35.80	40.50	45.60	50.80	56.00	60.90	64.90	67.50	68.00	65.70	TE12	6
	41.20	46.90	53.10	59.90	67.00	74.00	81.00	87.00	90.00	91.00	88.00	TE12	7
	54.50	62.50	71.00	80.00	89.00	97.00	105.00	110.00	113.00	112.00	106.00	TE20	8
	60.10	69.50	80.00	91.00	102.00	113.00	123.00	131.00	136.00	135.00	128.00	TE20	9
	65.50	75.00	86.00	98.00	110.00	122.00	133.00	143.00	150.00	153.00	149.00	TE55	10
	72.00	83.00	95.00	108.00	121.00	134.00	147.00	157.00	165.00	167.00	163.00	TE55	11
	78.00	90.00	103.00	117.00	132.00	147.00	161.00	174.00	183.00	187.00	183.00	TE55	12
	96.00	111.00	127.00	145.00	163.00	182.00	199.00	214.00	225.00	228.00	220.00	TE55	13

Capacity in kW. range N. -40°C to +10°C. opening superheat sh= 4 K **R22**

Condensing temperature	Evaporating [°C]											Valve type	Orifice
	-40	-35	-30	-25	-20	-15	-10	-5	0	5	10		
35°C	4.67	5.27	5.93	6.62	7.34	8.08	8.80	9.47	10.04	10.45	10.63	TE5	0.5
	8.56	9.69	10.90	12.18	13.51	14.85	16.16	17.36	18.37	19.07	19.34	TE5	1
	11.99	13.59	15.30	17.09	18.93	20.78	22.55	24.13	25.42	26.24	26.45	TE5	2
	15.15	17.14	19.30	21.59	23.98	26.40	28.76	30.90	32.70	33.90	34.20	TE5	3
	20.14	22.93	25.95	29.17	32.50	35.90	39.20	42.10	44.50	45.90	46.20	TE5	4
	24.56	27.70	31.20	34.90	39.00	43.20	47.50	51.70	55.30	58.10	59.50	TE12	5
	31.20	35.40	40.10	45.20	50.80	56.70	62.70	68.50	74.00	77.00	79.00	TE12	6
	40.30	45.50	51.30	57.70	64.70	72.00	80.00	88.00	95.00	101.00	104.00	TE12	7
	54.10	61.80	70.00	79.00	89.00	99.00	109.00	117.00	125.00	129.00	130.00	TE20	8
	58.00	66.70	76.00	87.00	99.00	111.00	124.00	136.00	146.00	153.00	155.00	TE20	9
	62.50	72.00	83.00	95.00	108.00	122.00	136.00	149.00	162.00	172.00	178.00	TE55	10
	68.60	79.00	91.00	105.00	119.00	133.00	149.00	163.00	177.00	187.00	194.00	TE55	11
	73.00	85.00	98.00	113.00	128.00	145.00	162.00	179.00	194.00	207.00	215.00	TE55	12
	88.00	103.00	119.00	137.00	156.00	176.00	197.00	218.00	237.00	251.00	260.00	TE55	13

Capacity in kW. range N. -40°C to +10°C. opening superheat sh= 4 K **R22**

Condensing temperature	Evaporating [°C]											Valve type	Orifice
	-40	-35	-30	-25	-20	-15	-10	-5	0	5	10		
45°C	4.71	5.32	5.98	6.70	7.45	8.25	9.06	9.87	10.63	11.30	11.83	TE5	0.5
	8.62	9.76	10.99	12.32	13.72	15.19	16.68	18.15	19.53	20.72	21.64	TE5	1
	12.06	13.69	15.44	17.31	19.29	21.33	23.38	25.36	27.18	28.70	29.78	TE5	2
	15.15	17.13	19.28	21.62	24.11	26.72	29.39	32.00	34.50	36.60	38.10	TE5	3
	19.95	22.71	25.74	29.04	32.60	36.30	40.10	43.70	47.10	49.90	51.80	TE5	4
	24.18	27.08	30.30	33.90	37.80	42.10	46.60	51.20	55.80	60.10	63.70	TE12	5
	30.30	34.20	38.60	43.50	48.90	54.80	61.10	67.70	74.00	80.00	85.00	TE12	6
	38.80	43.30	48.30	54.00	60.40	67.40	75.00	83.00	92.00	100.00	107.00	TE12	7
	52.60	59.80	67.80	76.00	86.00	96.00	107.00	117.00	127.00	136.00	142.00	TE20	8
	55.00	62.80	71.00	81.00	92.00	104.00	117.00	130.00	144.00	156.00	165.00	TE20	9
	58.00	67.50	78.00	90.00	103.00	117.00	132.00	147.00	163.00	177.00	189.00	TE55	10
	63.20	74.00	85.00	98.00	112.00	127.00	143.00	160.00	176.00	192.00	205.00	TE55	11
	67.00	78.00	90.00	104.00	119.00	136.00	154.00	173.00	191.00	209.00	225.00	TE55	12
	79.00	93.00	108.00	124.00	143.00	163.00	185.00	208.00	231.00	252.00	270.00	TE55	13

Capacity in kW. range N. -40°C to +10°C. opening superheat sh= 4 K **R22**

Condensing temperature	Evaporating [°C]											Valve type	Orifice
	-40	-35	-30	-25	-20	-15	-10	-5	0	5	10		
55°C	4.68	5.27	5.92	6.62	7.38	8.18	9.02	9.88	10.74	11.56	12.30	TE5	0.5
	8.55	9.66	10.87	12.18	13.59	15.09	16.65	18.24	19.81	21.29	22.60	TE5	1
	11.94	13.54	15.27	17.15	19.15	21.26	23.44	25.63	27.75	29.70	31.40	TE5	2
	14.93	16.82	18.90	21.17	23.62	26.25	29.00	31.80	34.60	37.20	39.60	TE5	3
	19.44	22.09	25.02	28.25	31.80	35.50	39.50	43.50	47.50	51.10	54.20	TE5	4
	23.48	26.08	28.97	32.20	35.80	39.70	44.00	48.50	53.30	58.10	62.70	TE12	5
	29.08	32.60	36.50	40.90	45.90	51.40	57.40	63.80	71.00	78.00	84.00	TE12	6
	37.00	40.80	45.00	49.80	55.10	61.20	67.90	75.00	84.00	92.00	101.00	TE12	7
	50.50	57.00	64.30	72.00	81.00	91.00	101.00	112.00	123.00	134.00	143.00	TE20	8
	51.70	58.40	66.00	75.00	84.00	95.00	107.00	120.00	134.00	148.00	161.00	TE20	9
	52.50	61.30	71.00	82.00	94.00	108.00	123.00	138.00	155.00	171.00	187.00	TE55	10
	56.80	66.30	77.00	89.00	102.00	116.00	132.00	149.00	167.00	184.00	201.00	TE55	11
	59.70	69.70	81.00	94.00	108.00	124.00	141.00	159.00	179.00	199.00	218.00	TE55	12
	69.10	81.00	95.00	110.00	127.00	146.00	167.00	189.00	213.00	237.00	260.00	TE55	13

Subcooling correction factor 'fsub' 'fsub' = saturated condensing temp. - liquid temp. at valve inlet

Subcooling [K]	2	4	10	15	20	25	30	35	40	45	50
Correction factor	0.98	1.00	1.07	1.13	1.19	1.25	1.30	1.36	1.42	1.47	1.53

Distributer correction factor* 'fp' * = pressure drop from evaporator onlet to outlet

Evaporating temp. [°C]	Δp	-40	-35	-30	-25	-20	-15	-10	-5	0	5	10
Pressure drop [bar]	0.00	1.00	1.00	1.00	1.00	1.00	1.00	1.00	1.00	1.00	1.00	1.00
	1.00	0.96	0.95	0.95	0.95	0.95	0.95	0.94	0.94	0.93	0.92	0.91
	1.50	0.93	0.93	0.93	0.93	0.92	0.92	0.91	0.91	0.90	0.88	0.86
	2.00	0.91	0.91	0.90	0.90	0.90	0.89	0.88	0.87	0.86	0.84	0.81

*calculated at 35°C condensing temperature

Capacity in kW. range B. -60°C to -25°C. opening superheat sh= 4 K **R22**

Condensing temperature	Evaporating [°C]								Valve type	Orifice
	-60	-55	-50	-45	-40	-35	-30	-25		
20°C	2.63	3.12	3.66	4.25	4.87	5.52	6.18	6.84	TE5	0.5
	4.80	5.71	6.71	7.80	8.95	10.10	11.40	12.60	TE5	1
	6.68	7.96	9.38	10.90	12.60	14.20	15.90	17.60	TE5	2
	8.39	10.00	11.80	13.80	15.90	18.10	20.30	22.50	TE5	3
	11.00	13.20	15.70	18.50	21.40	24.50	27.60	30.60	TE5	4
	12.20	14.40	16.90	19.60	22.50	25.60	28.80	32.00	TE12	5
	15.80	18.80	22.10	25.80	29.90	34.20	38.70	43.30	TE12	6
	20.80	24.60	29.00	33.90	39.20	45.00	51.10	57.30	TE12	7
	For this range, please contact Danfoss								TE20	8
									TE20	9
	30,70	36,00	41,90	48,10	54,50	61,00	67,20	72,90	TE55	9B
	36.30	43.00	50.40	58.60	67.50	76.80	86.30	95.70	TE55	10
	40.20	47.60	55.90	65.00	74.90	85.30	95.90	106.00	TE55	11
	43.30	51.40	60.40	70.50	81.40	92.90	105.00	117.00	TE55	12
	53.10	63.20	74.60	87.30	101.00	116.00	131.00	147.00	TE55	13

Capacity in kW. range B. -60°C to -25°C. opening superheat sh= 4 K **R22**

Condensing temperature	Evaporating [°C]								Valve type	Orifice
	-60	-55	-50	-45	-40	-35	-30	-25		
30°C	2.70	3.21	3.78	4.40	5.07	5.78	6.52	7.28	TE5	0.5
	4.90	5.85	6.90	8.06	9.30	10.60	12.00	13.40	TE5	1
	6.78	8.11	9.61	11.30	13.00	14.90	16.80	18.80	TE5	2
	8.43	10.10	12.00	14.10	16.40	18.80	21.30	23.80	TE5	3
	10.80	13.10	15.70	18.60	21.80	25.20	28.80	32.40	TE5	4
	12.10	14.40	16.90	19.70	22.80	26.10	29.70	33.40	TE12	5
	15.50	18.40	21.80	25.70	29.90	34.50	39.50	44.80	TE12	6
	19.90	23.70	28.00	33.00	38.60	44.70	51.20	58.10	TE12	7
	For this range, please contact Danfoss								TE20	8
									TE20	9
	30,00	35,40	41,30	47,80	54,60	61,70	68,70	75,50	TE55	9B
	34.70	41.20	48.70	57.00	66.00	75.80	86.00	96.40	TE55	10
	38.10	45.40	53.60	62.80	72.80	83.60	95.00	107.00	TE55	11
	40.80	48.60	57.50	67.50	78.40	90.30	103.00	116.00	TE55	12
	49.10	58.70	69.70	82.10	95.80	111.00	127.00	143.00	TE55	13

Subcooling correction factor 'fsub' 'fsub' = saturated condensing temp. - liquid temp. at valve inlet

Subcooling [K]	2	4	10	15	20	25	30	35	40	45	50
Correction factor	0.98	1.00	1.07	1.14	1.20	1.26	1.31	1.37	1.43	1.49	1.55

Distributer correction factor* 'fp' * = pressure drop from evaporator inlet to outlet

Evaporating temperature [°C]	Δp	-60	-55	-50	-45	-40	-35	-30	-25
Pressure drop [bar]	0.0	1.00	1.00	1.00	1.00	1.00	1.00	1.00	1.00
	1.0	0.96	0.96	0.96	0.96	0.96	0.95	0.95	0.95
	1.5	0.94	0.94	0.93	0.93	0.93	0.93	0.93	0.93
	2.0	0.91	0.91	0.91	0.91	0.91	0.91	0.90	0.90

*calculated at 35°C condensing temperature

Capacity in kW. range B. -60°C to -25°C. opening superheat sh= 4 K **R22**

Condensing temperature	Evaporating [°C]								Valve type	Orifice
	-60	-55	-50	-45	-40	-35	-30	-25		
40°C	2.72	3.24	3.82	4.46	5.16	5.91	6.70	7.53	TE5	0.5
	4.92	5.88	6.96	8.15	9.45	10.90	12.30	13.90	TE5	1
	6.76	8.12	9.66	11.40	13.20	15.20	17.30	19.50	TE5	2
	8.31	10.00	11.90	14.10	16.50	19.00	21.70	24.50	TE5	3
	10.50	12.70	15.30	18.30	21.60	25.30	29.10	33.10	TE5	4
	11.80	14.00	16.50	19.40	22.50	26.00	29.70	33.60	TE12	5
	14.80	17.70	21.00	24.80	29.10	33.90	39.10	44.60	TE12	6
	18.60	22.20	26.40	31.30	36.70	42.90	49.60	56.70	TE12	7
	For this range, please contact Danfoss								TE20	8
									TE20	9
	28,60	33,90	39,80	46,30	53,20	60,50	67,90	75,30	TE55	9B
	32.30	38.60	45.80	53.80	62.70	72.40	82.70	93.50	TE55	10
	35.30	42.20	50.10	58.90	68.70	79.40	90.80	103.00	TE55	11
	37.50	44.90	53.30	62.80	73.40	85.00	97.50	111.00	TE55	12
	44.20	53.10	63.30	74.90	88.00	102.00	118.00	135.00	TE55	13

Capacity in kW. range B. -60°C to -25°C. opening superheat sh= 4 K **R22**

Condensing temperature	Evaporating [°C]								Valve type	Orifice
	-60	-55	-50	-45	-40	-35	-30	-25		
50°C	2.71	3.23	3.81	4.46	5.17	5.93	6.75	7.62	TE5	0.5
	4.87	5.83	6.91	8.12	9.44	10.90	12.40	14.00	TE5	1
	6.65	8.01	9.55	11.30	13.20	15.30	17.50	19.80	TE5	2
	8.08	9.75	11.70	13.80	16.20	18.80	21.60	24.60	TE5	3
	9.94	12.10	14.70	17.70	21.00	24.70	28.80	33.00	TE5	4
	11.20	13.30	15.80	18.60	21.70	25.20	28.90	33.00	TE12	5
	13.80	16.60	19.80	23.50	27.70	32.40	37.60	43.30	TE12	6
	17.00	20.30	24.30	28.90	34.20	40.10	46.60	53.70	TE12	7
	For this range, please contact Danfoss								TE20	8
									TE20	9
	26,90	31,90	37,60	43,80	50,60	57,90	65,40	73,00	TE55	9B
	29.60	35.40	42.10	49.70	58.10	67.40	77.40	88.00	TE55	10
	32.00	38.40	45.70	53.90	63.20	73.30	84.30	95.90	TE55	11
	33.70	40.40	48.20	57.00	66.90	77.80	89.70	102.00	TE55	12
	38.80	46.80	56.10	66.60	78.60	92.00	107.00	122.00	TE55	13

Subcooling correction factor 'fsub' 'fsub' = saturated condensing temp. - liquid temp. at valve inlet

Subcooling [K]	2	4	10	15	20	25	30	35	40	45	50
Correction factor	0.98	1.00	1.07	1.14	1.20	1.26	1.31	1.37	1.43	1.49	1.55

Distributer correction factor* 'fp' * = pressure drop from evaporator inlet to outlet

Evaporating temperature [°C]	Δp	-60	-55	-50	-45	-40	-35	-30	-25
Pressure drop [bar]	0.0	1.0	1.0	1.0	1.0	1.0	1.0	1.0	1.0
	1.0	0.96	0.96	0.96	0.96	0.96	0.95	0.95	0.95
	1.5	0.94	0.94	0.93	0.93	0.93	0.93	0.93	0.93
	2.0	0.91	0.91	0.91	0.91	0.91	0.91	0.90	0.90

*calculated at 35°C condensing temperature

Dimensions and weights

TE5

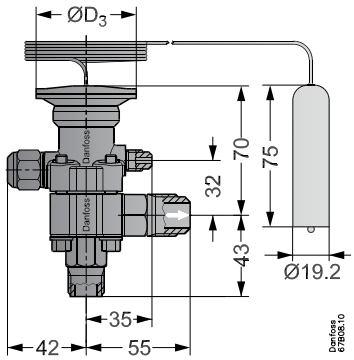

TE5 - Flare, angleway
Weight: 1.1 kg

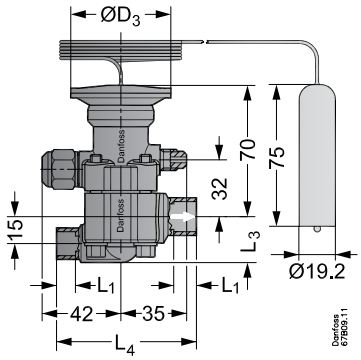

TE5 - Solder, straightway
Weight: 1 kg

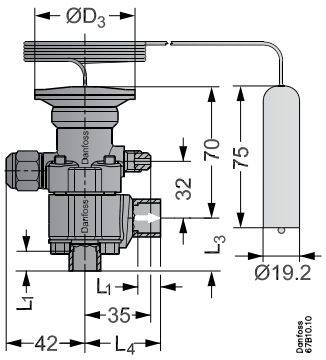

TE5 - Solder, angleway
Weight: 1 kg

TE5

Outlet side $\varnothing D_1$	L_1 [mm]
½ In. / 12 mm ODF	10
$^3/_8$ In. / 16 mm ODF	10
$^7/_8$ In. / 22 mm ODF	17

Outlet side $\varnothing D_2$	L_1 [mm]
$^5/_8$ In. / 16 mm ODF	12
$^7/_8$ In. / 22 mm ODF	17
$1^1/_8$ In. / 28 mm ODM	25

Element

	$\varnothing D_3$ [mm]
Range N	53
Range B	60

Valve body		L3	L4
Straight way	$^7/_8 \times 1^1/_8$	28	97
	22 X 28 mm		
	$^5/_8 \times ^7/_8$		
	16 X 22 mm		
	Others	25	74
Angel way	$^7/_8 \times 1^1/_8$	39	52
	22 × 28 mm		
	Others	28	40

Dimensions and weights
(continued)

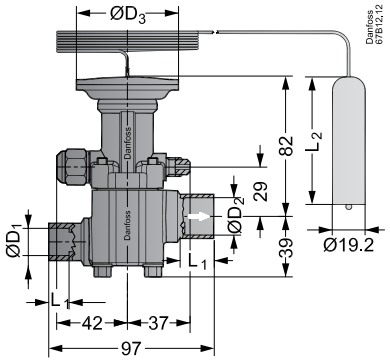

TE12 and 20 - Solder, straightway
Weight: TE12: 1.5 kg
TE20: 1.7 kg

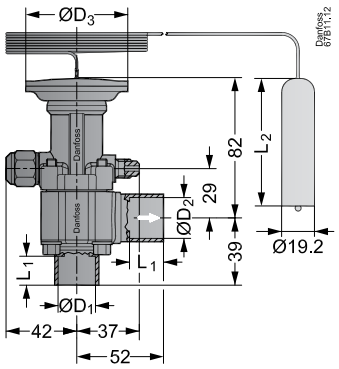

TE12 and 20 - Solder, angleway
Weight: TE12: 1.5 kg
TE20: 1.6 kg

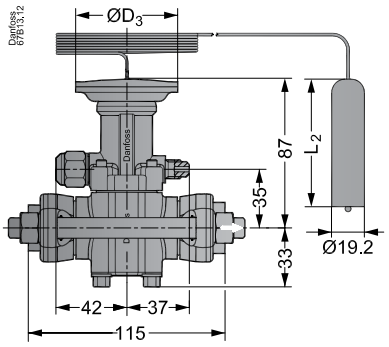

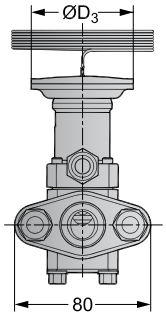

TE12 - Solder flanges, straightway
Weight: Without filter: 2.3 kg

TE12 and TE20

Inlet side ØD1	L1 mm
7/8 in. / 22 mm ODF	17

Outlet side ØD2	L1 [mm]
1 1/8 in. / 28 mm ODM	25

Bulb - TE12

	L2 mm	ØD3 mm
Range N	75.0	60
Range B	120.0	72

Bulb - TE20

	L2 mm	ØD3 mm
Range N/B	120.0	72

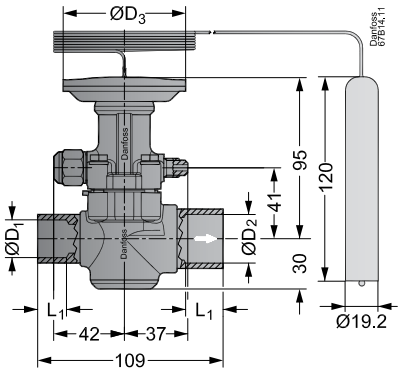

TE55 - Solder, straightway
Weight: 1.7 kg

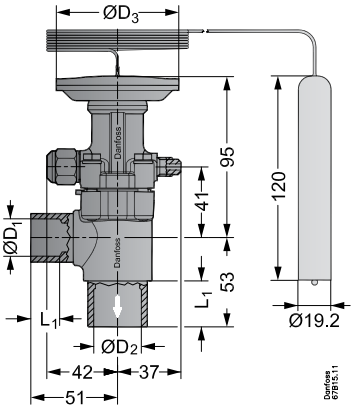

TE55 - Solder, angleway
Weight: 1.6 kg

TE55

Inlet side ØD1	L1 [mm]
7/8 in. / 22 mm ODF	17
1 1/8 in. / 28 mm ODM	25

Outlet side ØD2	L1 [mm]
1 1/8 in. / 28 mm ODF	22
1 3/8 in. / 35 mm ODM	27

Danfoss can accept no responsibility for possible errors in catalogues, brochures and other printed material. Danfoss reserves the right to alter its products without notice. This also applies to products already on order provided that such alterations can be made without subsequential changes being necessary in specifications already agreed.
All trademarks in this material are property of the respective companies. Danfoss and the Danfoss logotype are trademarks of Danfoss A/S. All rights reserved.